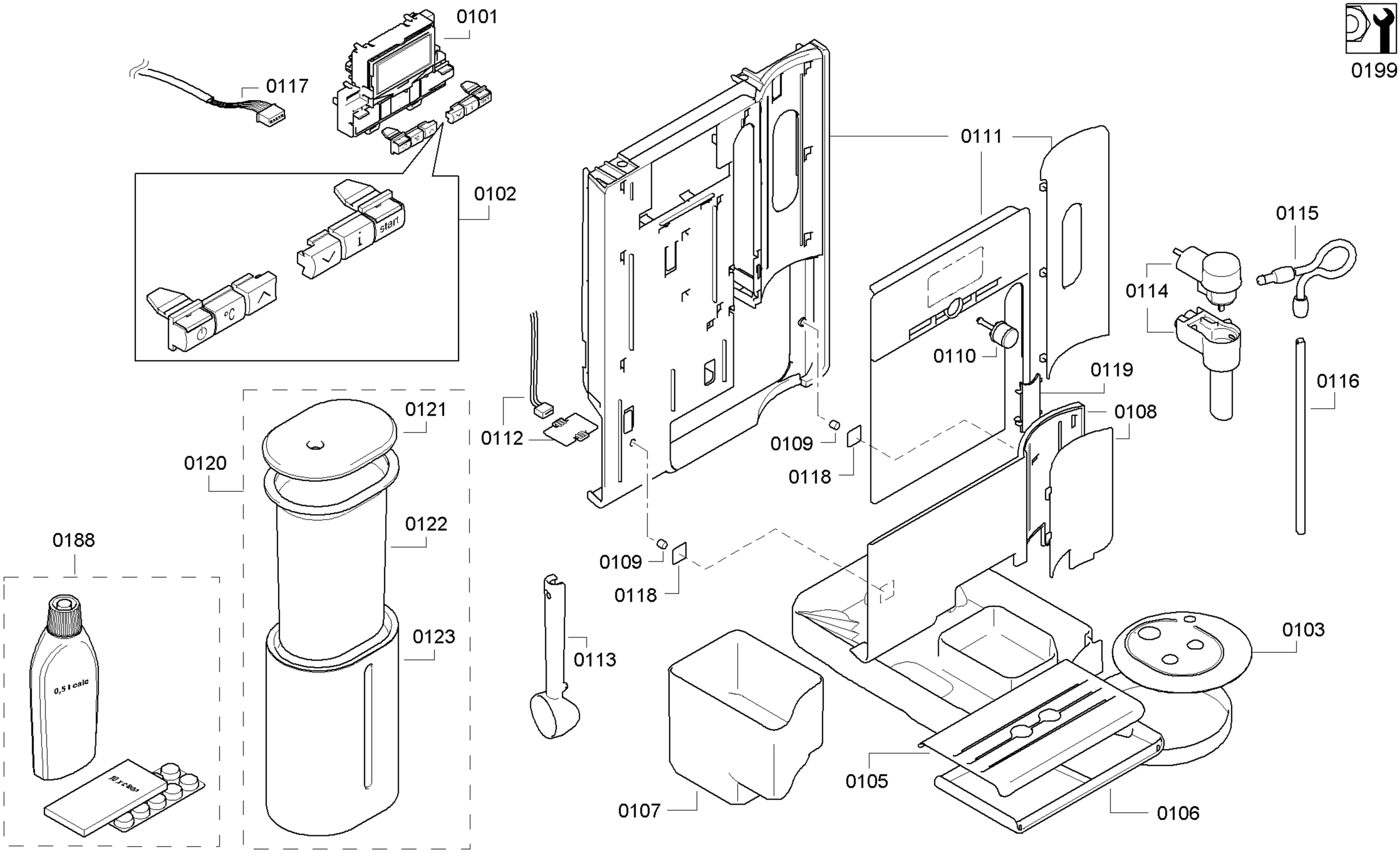

Copyright © (2011) by Siemens / SERRU_200100481_1

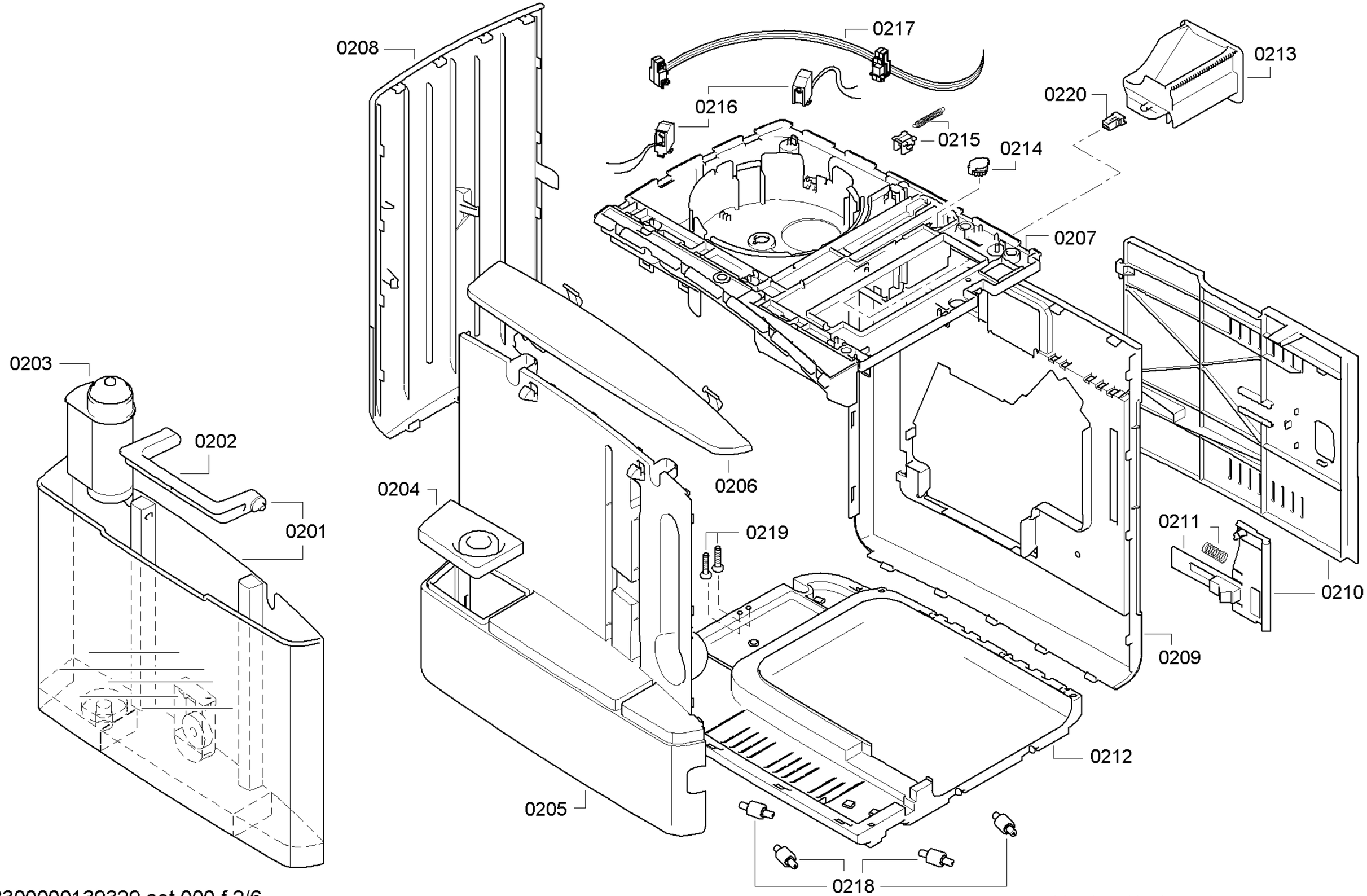

58300000139329 aet 000 f 2/6

Copyright © (2011) by Siemens / SERRU_200100481_1

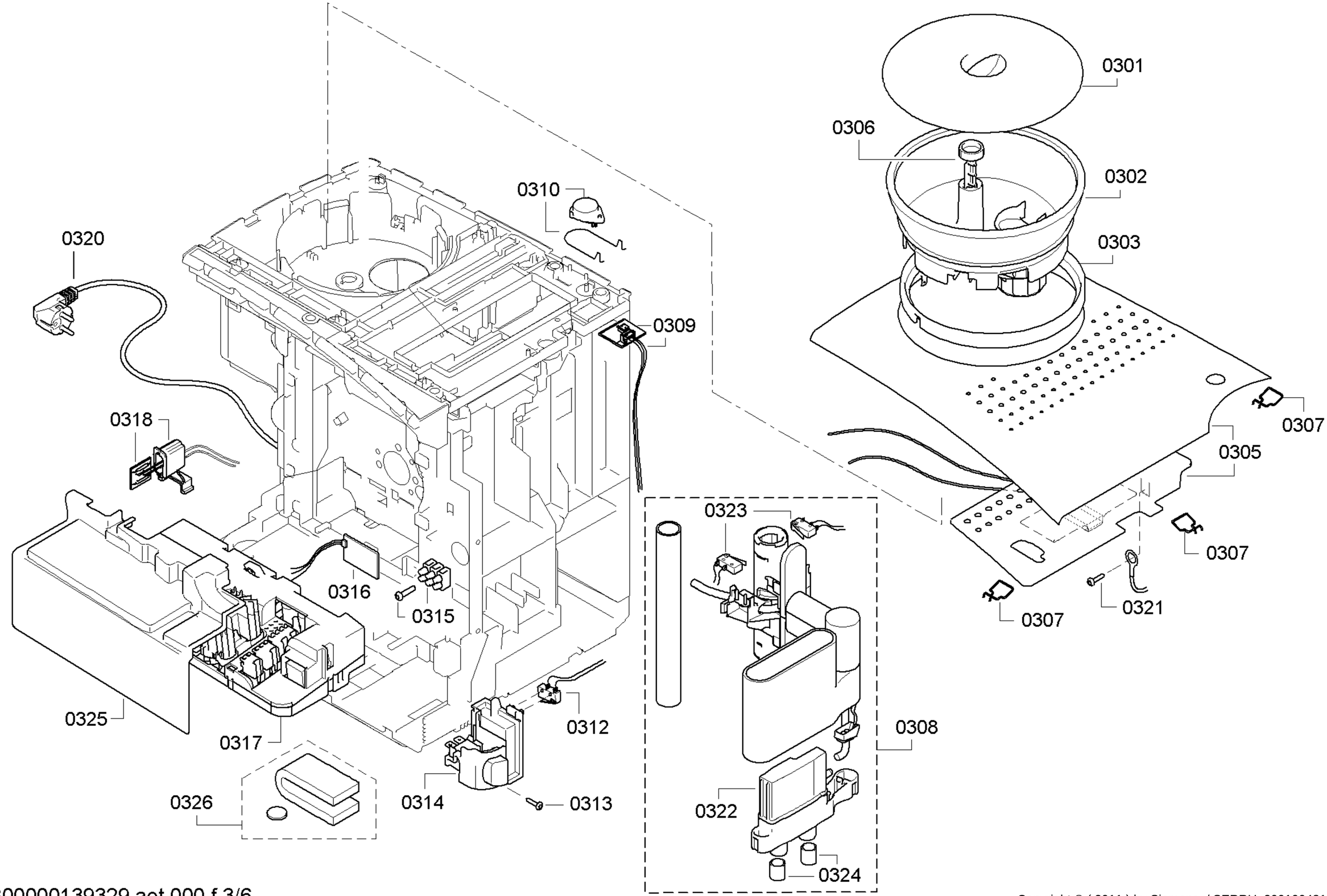

Copyright © (2011) by Siemens / SERRU_200100481_1

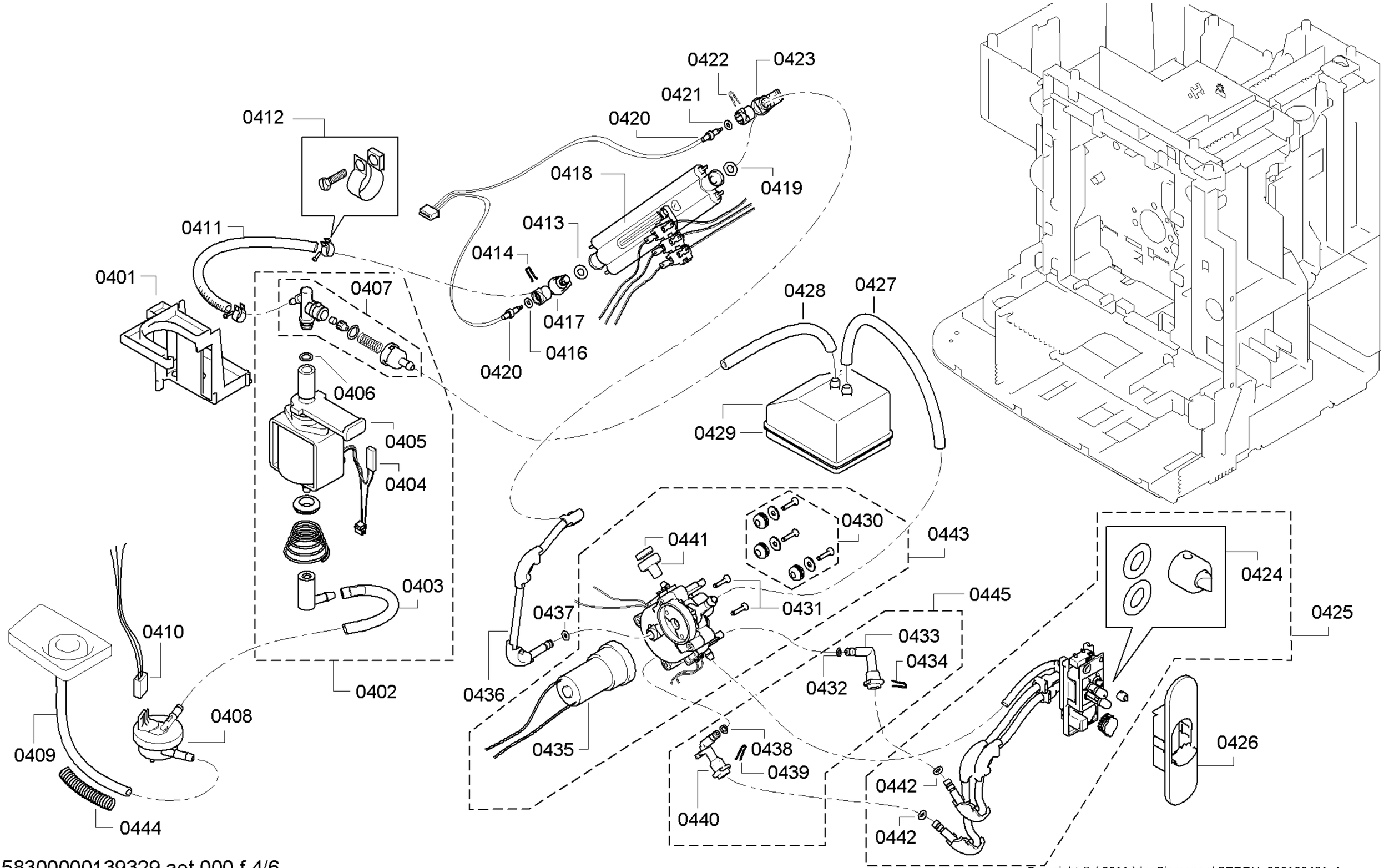

Copyright © (2011) by Siemens / SERRU_200100481_1

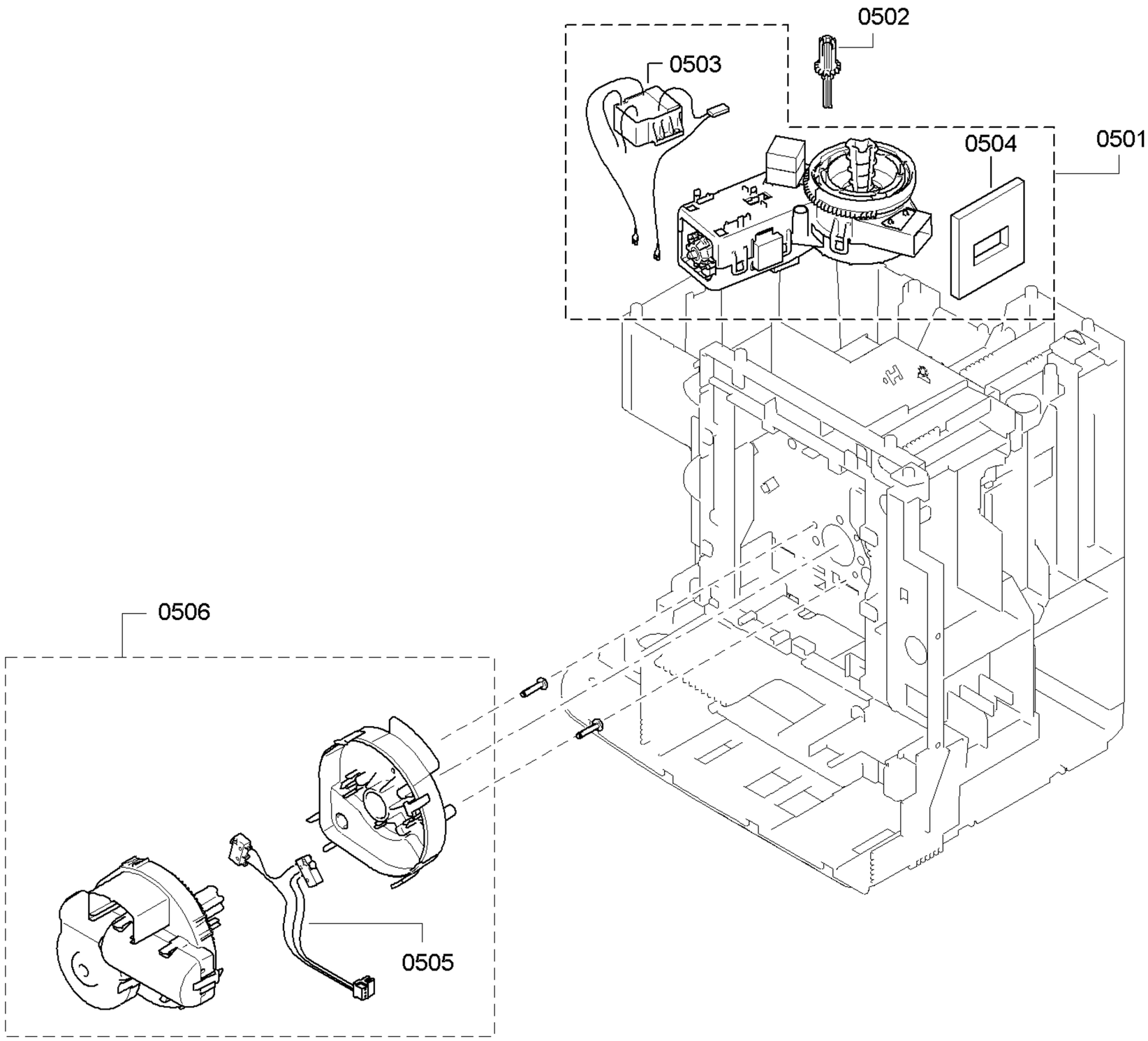

Copyright © (2011) by Siemens / SERRU_200100481_1

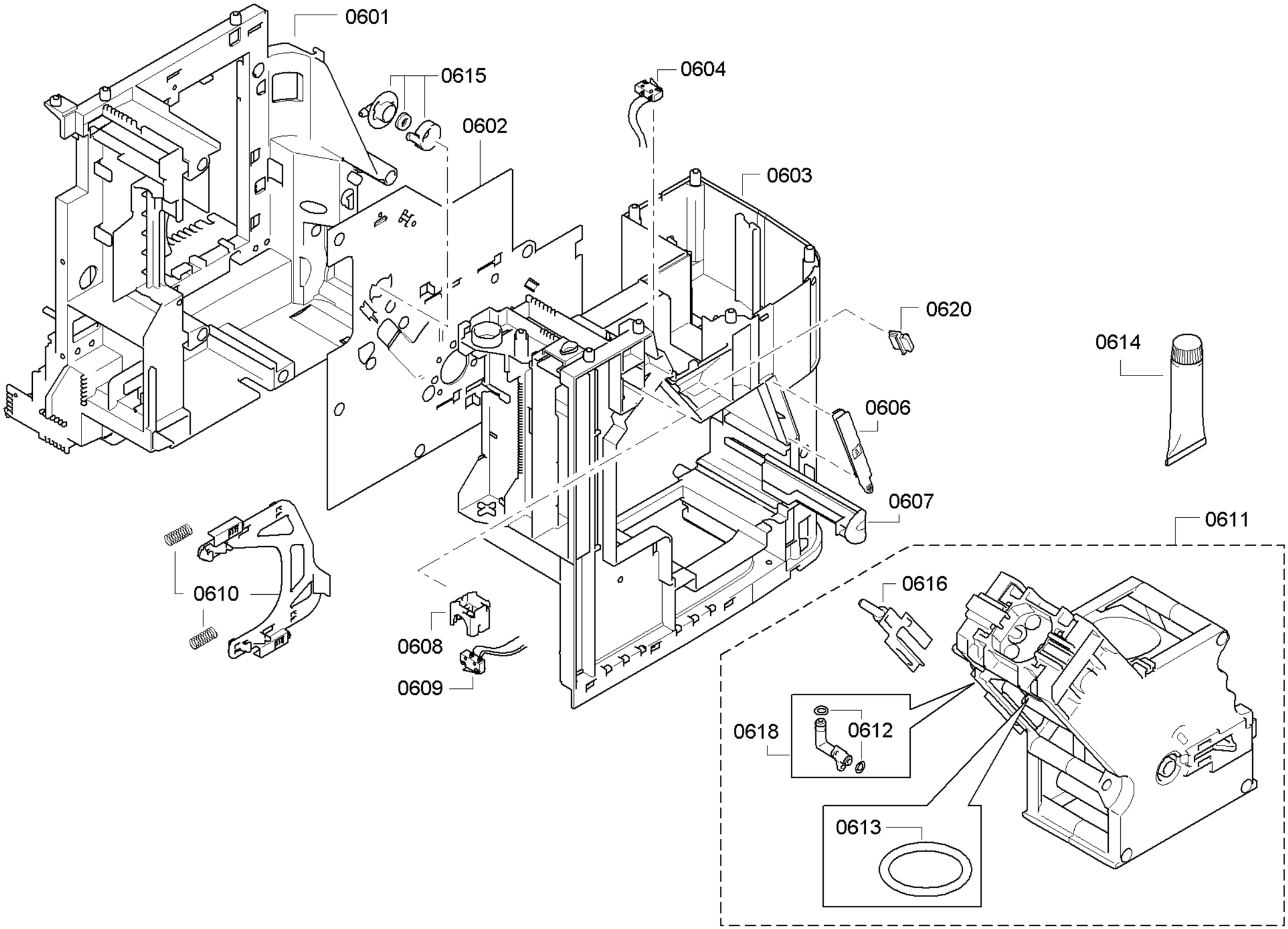

Copyright © (2011) by Siemens / SERRU_200100481_1