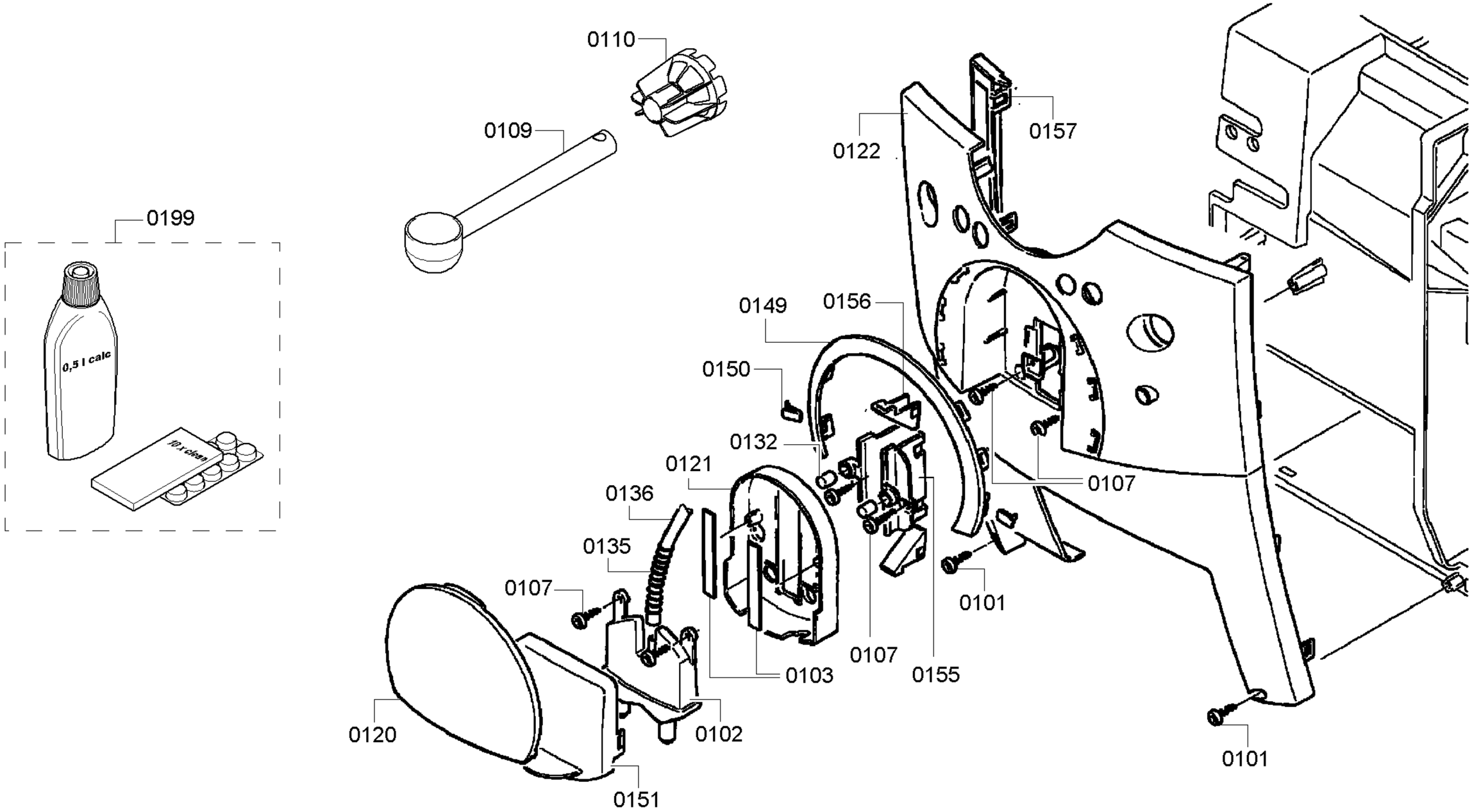

Copyright © (2011) by Bosch / SERRU_200100481_1

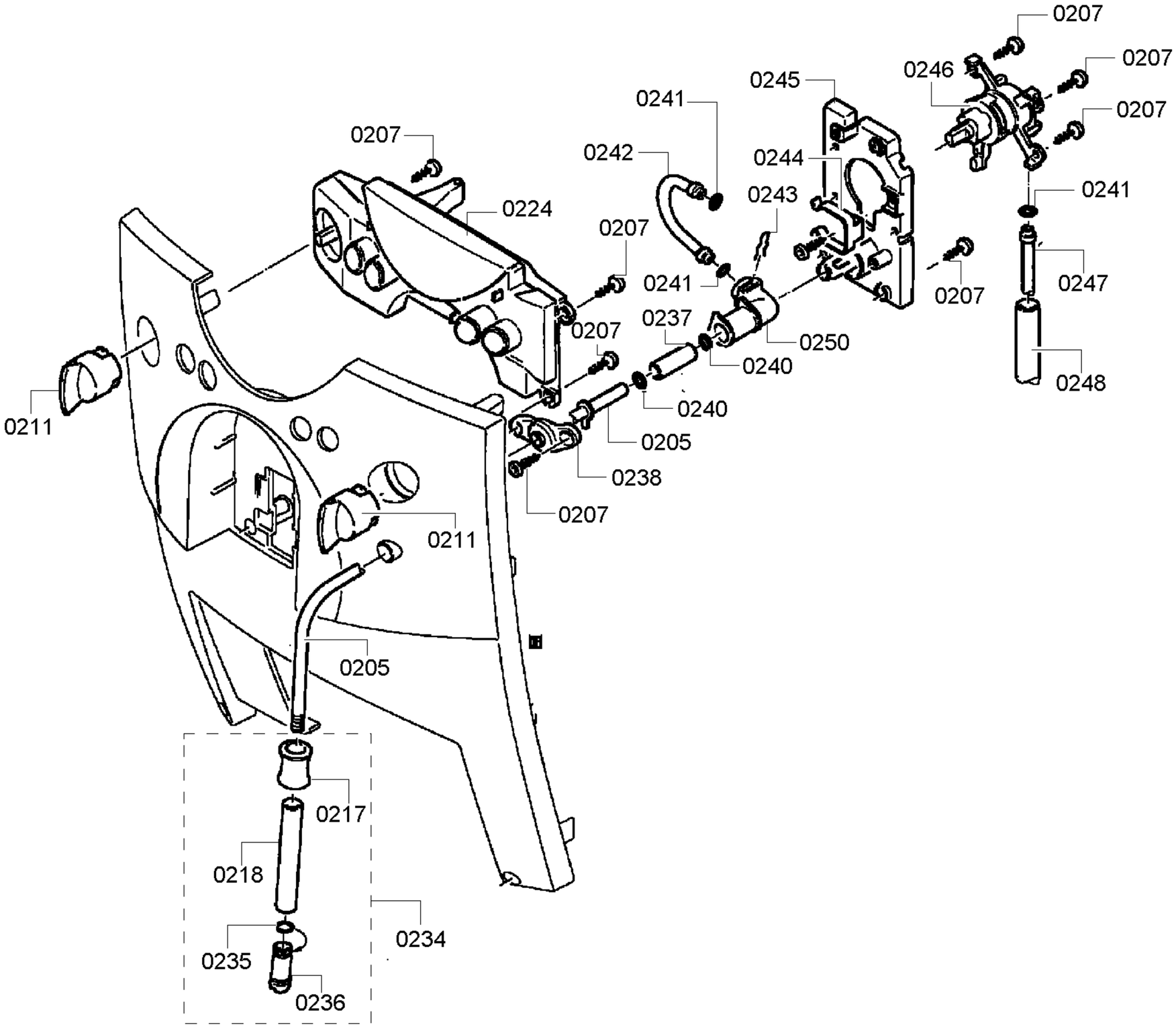

Copyright © (2011) by Bosch / SERRU_200100481_1

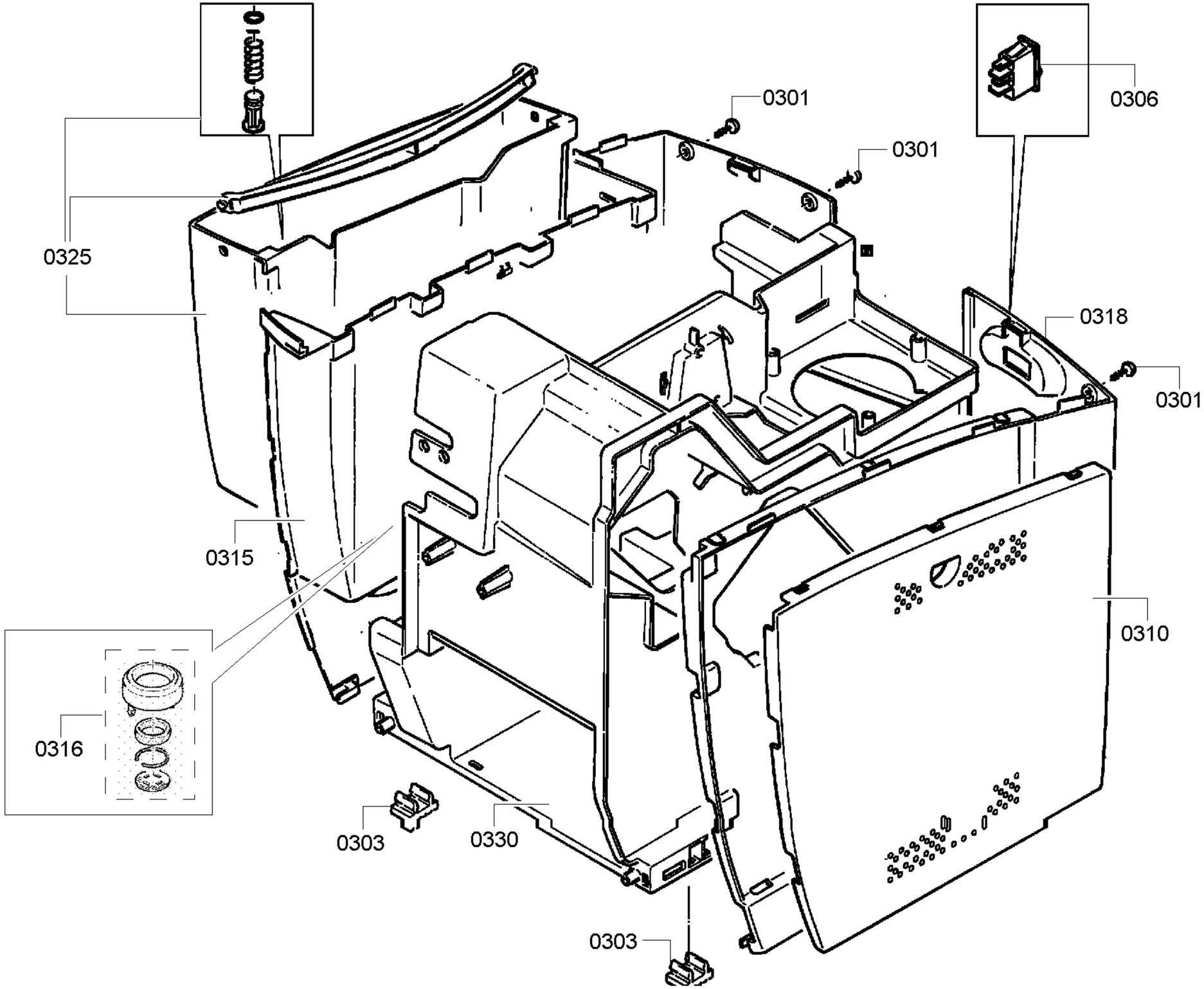

Copyright © (2011) by Bosch / SERRU_200100481_1

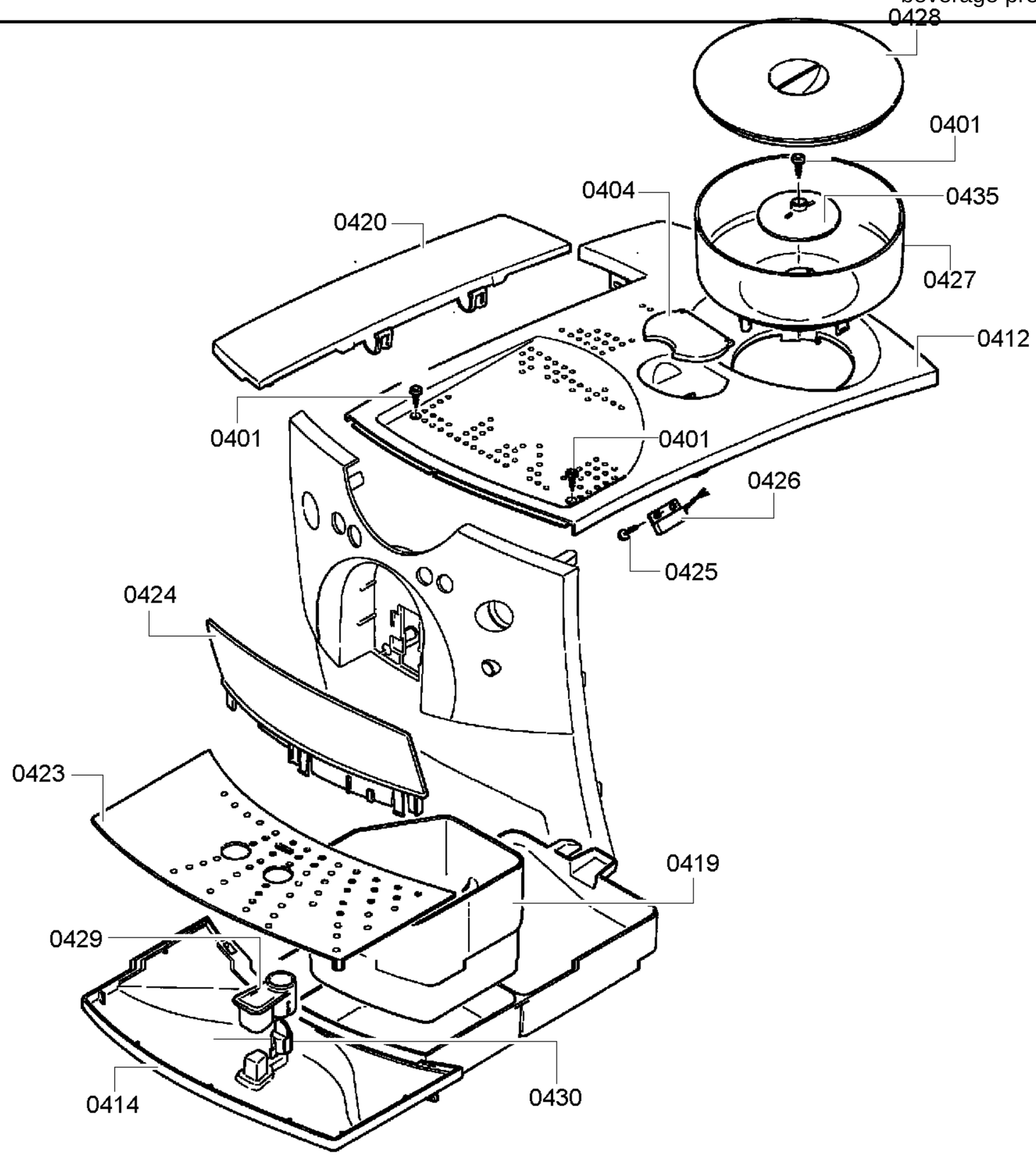

Copyright © (2011) by Bosch / SERRU_200100481_1

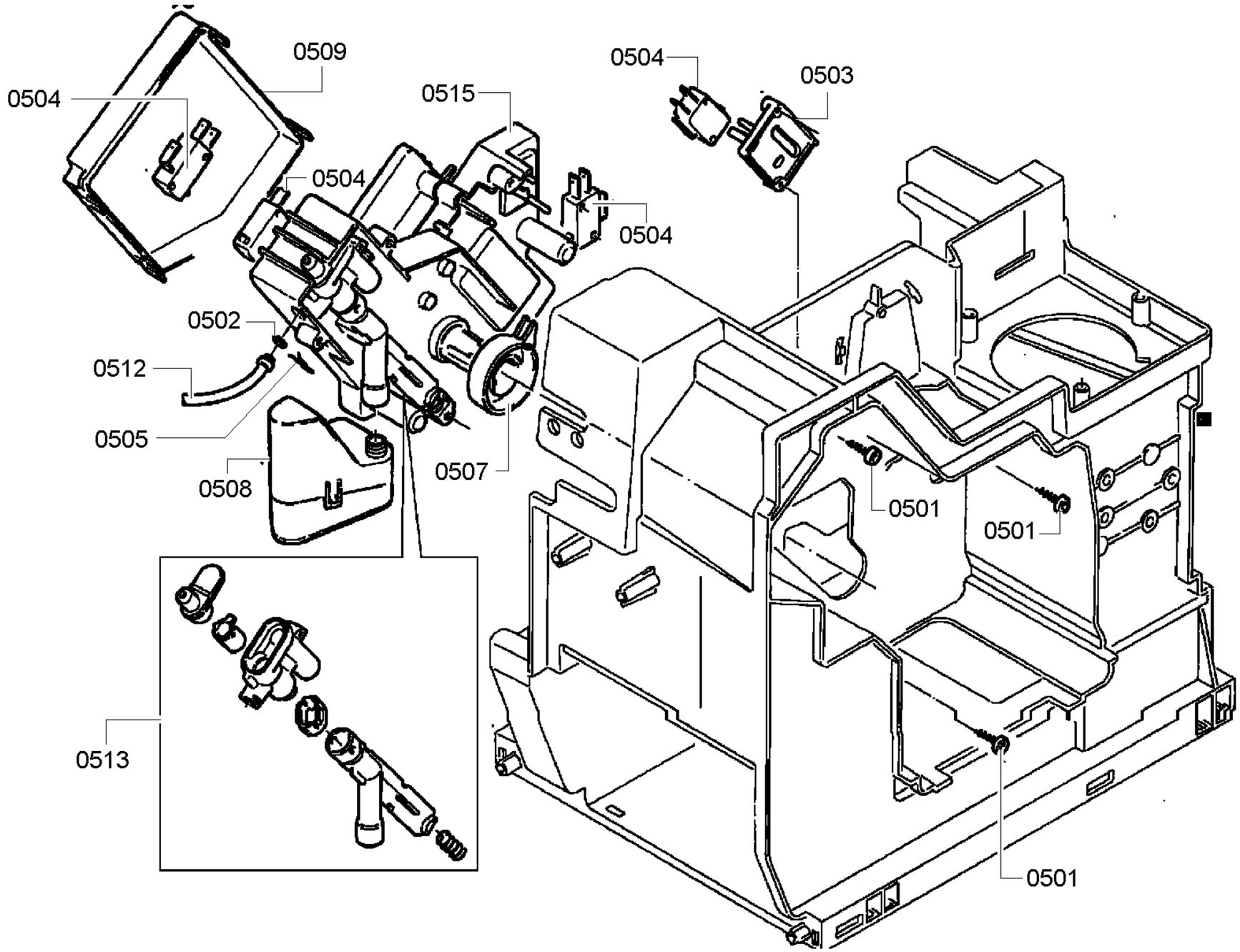

Copyright © (2011) by Bosch / SERRU_200100481_1

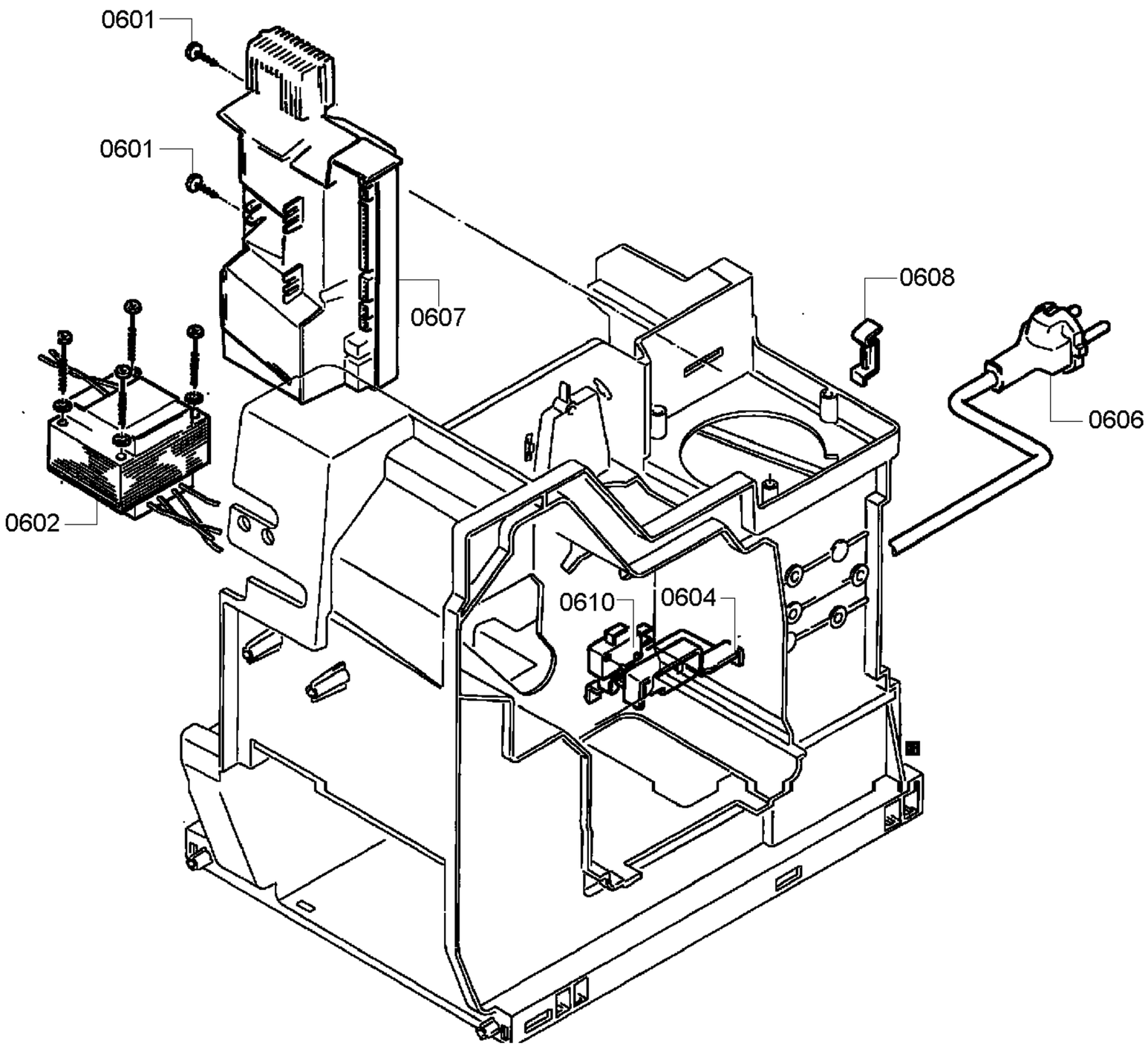

Copyright © (2011) by Bosch / SERRU_200100481_1

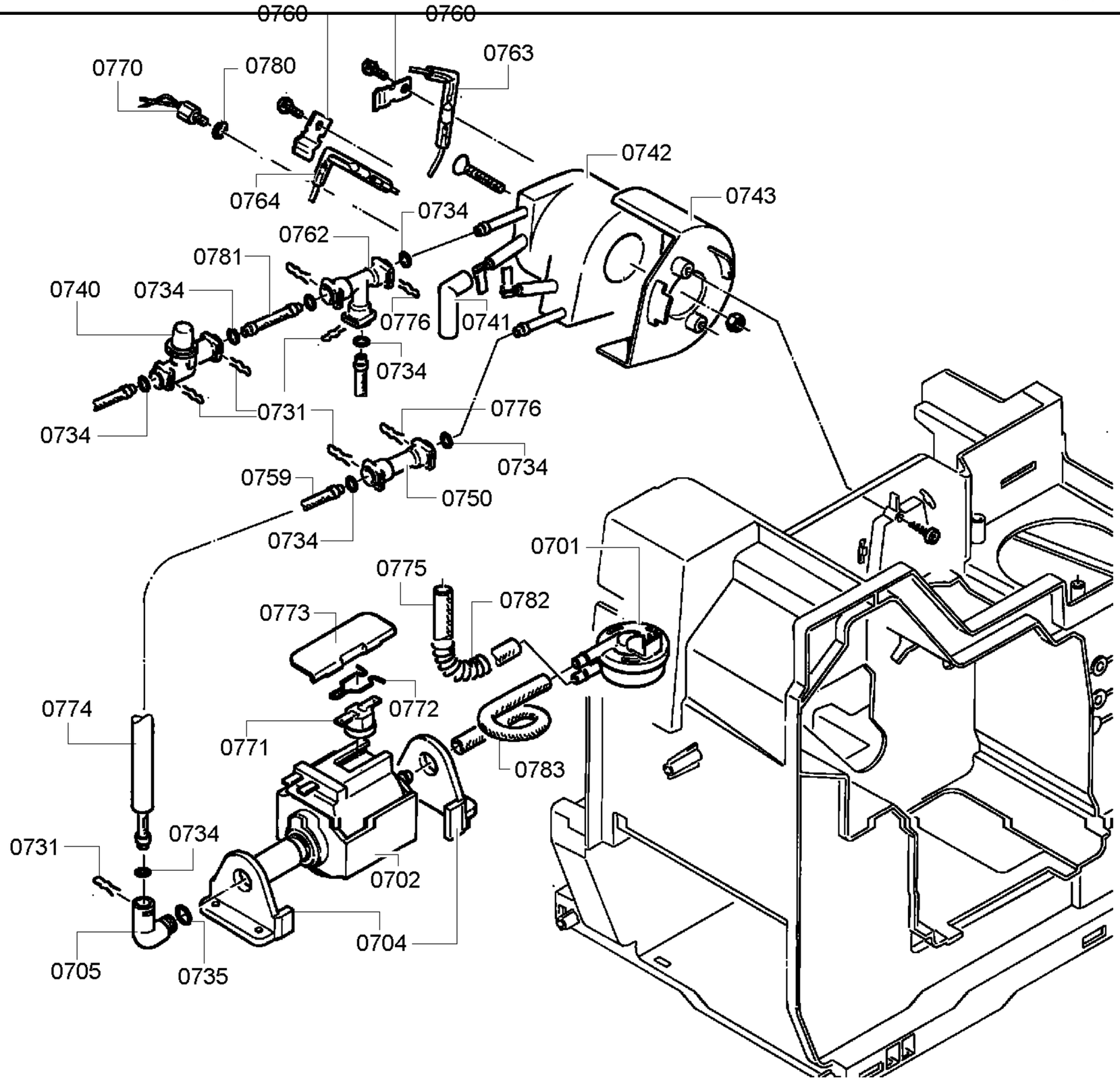

Copyright © (2011) by Bosch / SERRU_200100481_1

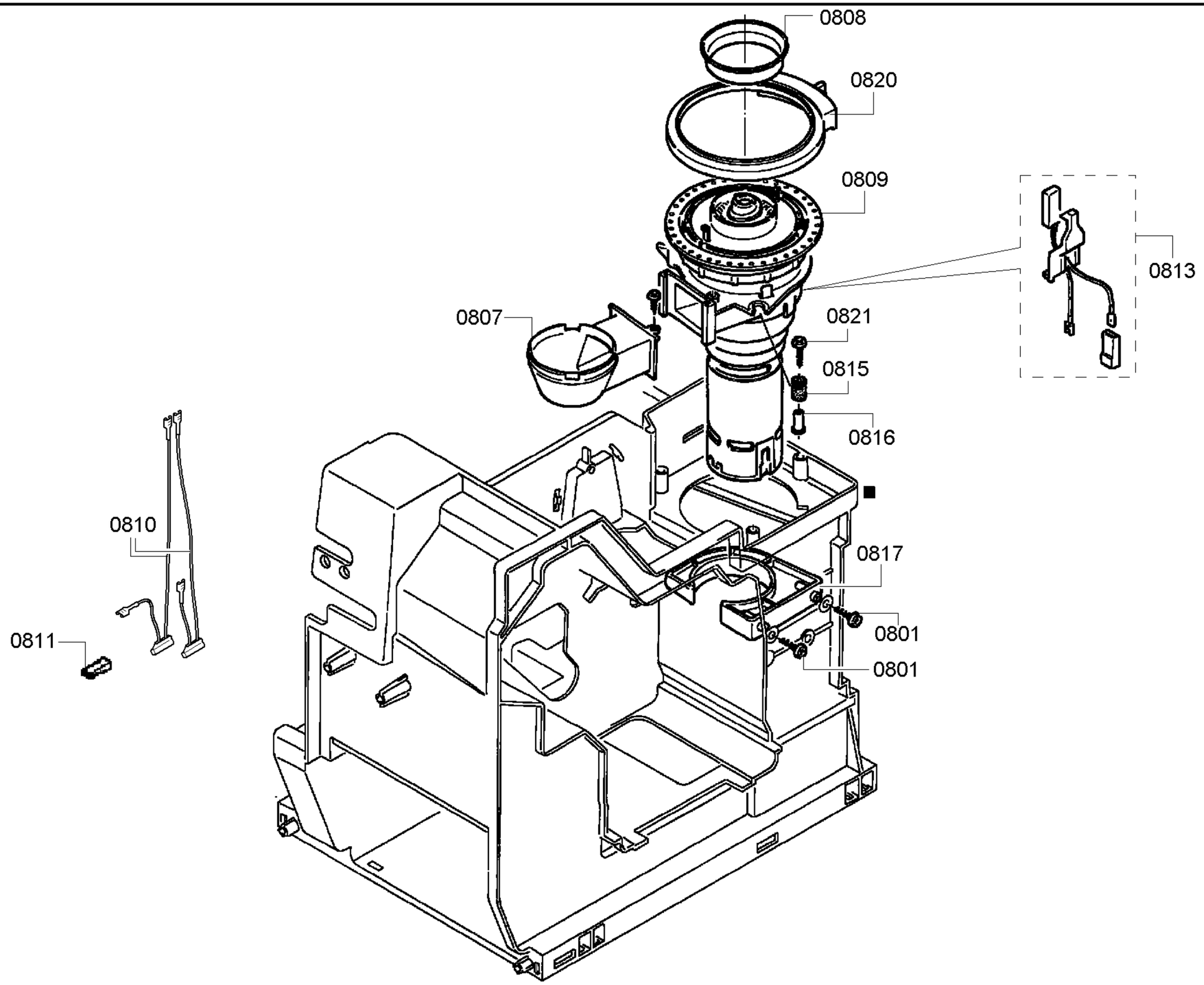

Copyright © (2011) by Bosch / SERRU_200100481_1

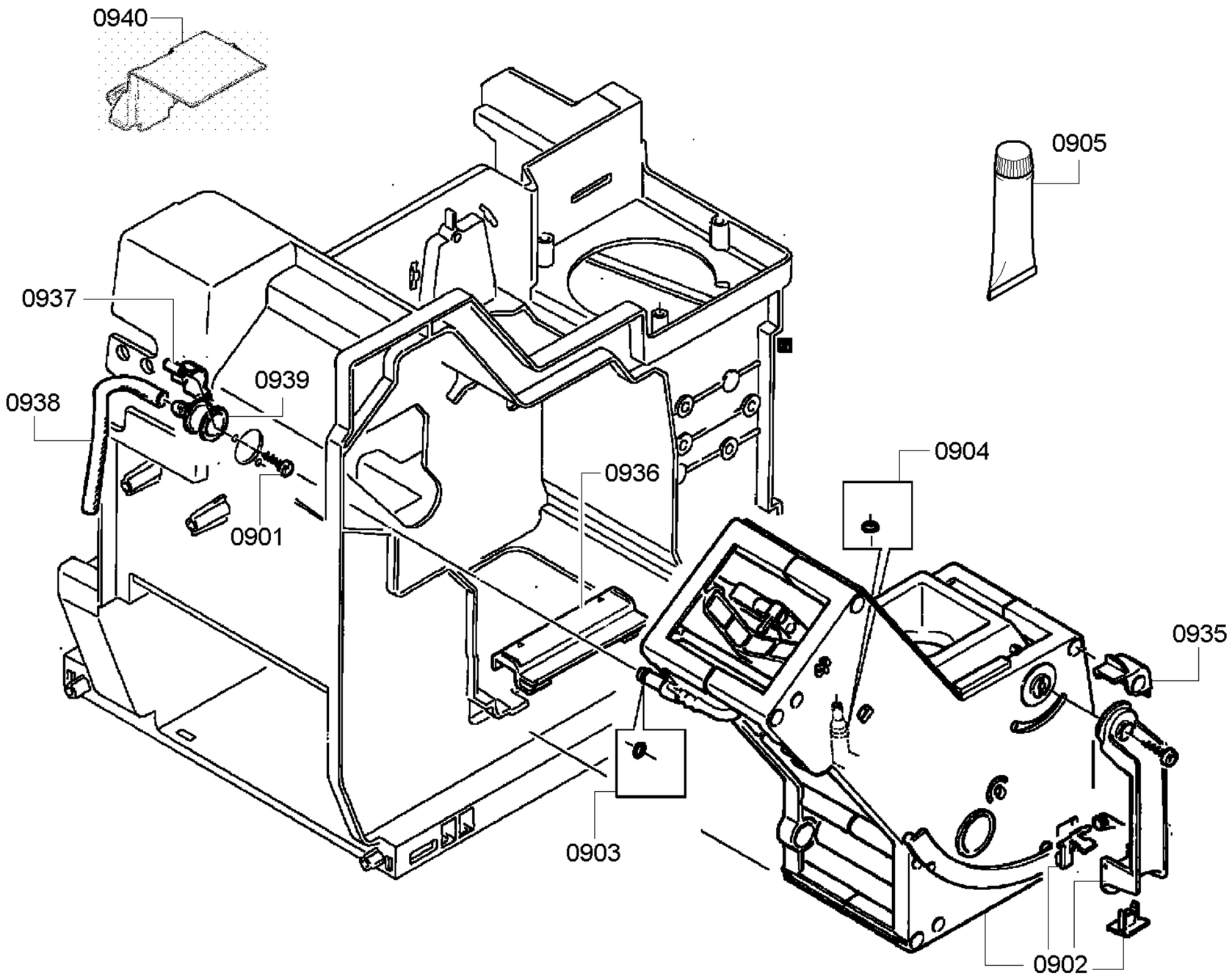

Copyright © (2011) by Bosch / SERRU_200100481_1